www.aymcdonald.com

A.Y. McDonald VM1 Manual Revised 1/15
3210-565 Rev. A

INSTALLATION & OPERATION MANUAL

SUBMERSIBLE SUMP PUMPS

5033CVSP-VM1

C UL US LISTED

Non-Potable Use Only

This pump has been manufactured with your needs in mind. Properly installed in the right application, your new A.Y. McDonald pump will give you years of carefree performance.

Important Safety Information:

Carefully read and understand all of the Warnings and installation instructions in this manual. Failure to follow these instructions could lead to serious bodily injury and/or property damage. Retain these instructions for future reference.

⚠ DANGER

RISK OF ELECTRICAL SHOCK. Always disconnect the power source before attempting to install, service or perform maintenance on the pump. Failure to do so may result in fatal electrical shock.

⚠ DANGER

RISK OF ELECTRICAL SHOCK. This pump is supplied with a grounding conductor and grounding-type attachment plug. To reduce the risk of electrical shock, be certain that it is connected only to a properly grounded, grounding-type receptacle.

⚠ DANGER

Water and electricity can be dangerous if certain precautions are not adhered to. This pump is designed to operate perfectly safe in a water environment; however, improper use and installation can result in personal harm from electrical shock. Please pay attention to the following warnings.

⚠ DANGER

Never touch any electrical device, including this pump, when it is touching water, in water, or even in a moist environment. Always unplug (disconnect the electricity) when working on or installing the unit.

⚠ DANGER

Keep all electrical connections away from wet and moist environments. Wet connections can cause electrical shock resulting in personal injury.

⚠ DANGER

Do not use this unit to pump chemicals, flammable liquids, sewage or corrosive liquids. You could injure yourself and the pump will fail. Pumping these types of liquids voids the warranty. A.Y. McDonald and other pump companies manufacture pumps for these types of liquids. Make sure you purchase a pump designed for your specific needs. This pump will handle fluids with the same characteristics as water.

⚠ WARNING

Always use a grounded outlet to attach the plug. A three-prong mating type receptacle is needed for safe use. This should be in accordance with the National Electric Code and any additional codes or laws required by your local government.

NOTICE

Height and/or piping restriction will reduce the pump output performance. See the performance chart below to insure you have the proper pump for your application. Whenever possible use the same or larger size pipe than the pump discharge for optimum performance. Reducing the pipe size will not harm your pump; it will just reduce the output.

SPECIFICATIONS

Model #	*5033CVSP-VM1*
HP	1/3
Amps	5.9
Solids Handling	1/2”
Discharge Size	$1^1/_2$”

Power supply requirements	120V, 60 Hz (15 amp)
Motor	Continuous Duty, Capacitor Start, Thermally Protected
Liquid Temperature Range	32°F - 120°F (0°C - 49°C)

PERFORMANCES

Model #	*Output in gallons per minute at listed discharge height above pumping level*					
	0’	*5’*	*10’*	*15’*	*20’*	*25’*
5033CVSP-VM1	60	56	50	35	15	6

PARTS LIST

5033CVSP-VM1

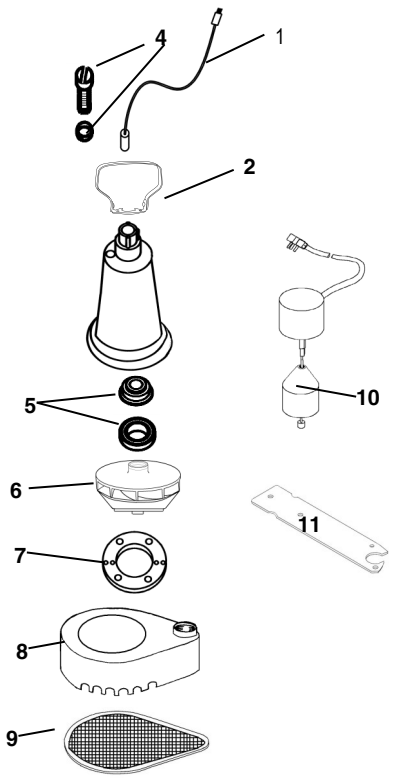

Ref	Description	PARTS FOR MODEL# 5033CVSP-VM1
1	Power Cord	*Please call your Professional Plumber for price and availability*
2	Handle	
3	Hose Coupling/Adapter	
4	Oil Fill Plug with O-ring	
5	Shaft Seal	
6	Impeller	
7	Gasket	
8	Volute/Base	
9	Intake Screen	
10	VM1 - Float Switch	
11	Vertical Float Switch Bracket	

⚠WARNING

It is strongly recommended to use a ground fault interrupt device on any electrical appliance, including this pump, when used in a wet or moist environment. This GFCI (ground fault circuit interrupter) should be listed by Underwriters Laboratories (UL). This is required by many local codes and enforcement agencies. It is strongly recommended by A.Y. McDonald as it provides a much safer installation and will greatly reduce possible injury from electrical shock.

⚠CAUTION

Do not use the power cord or discharge hose to carry or handle the pump. Doing so may cause damage to the power cord or discharge hose. Use the carrying handle supplied with the pump.

⚠CAUTION

EXTENSION CORDS: For best performance, it is recommended to connect the power cord directly to the grounded GFCI outlet. If the use of an extension cord is necessary, always use a grounded waterproof type cord. Never use longer than a 25-ft. cord that is lighter than 14/3 gauge.

⚠CAUTION

A qualified electrician must perform all wiring.

NOTICE

Your pump has thermal over-load protection built in. It is not recommended for pumping liquids over 120°F. The thermal overload protector will automatically shut down the pump in an overheat situation. It will then reset itself once the pump cools down. The pump will then work again. This overload is designed as a safety device and it will fail after repeated use. Normal operation is for fluids between 32°F & 120°F.

NOTICE

DO NOT RUN THE PUMP DRY. The pump depends on water for cooling and lubrication. Operating the pump without water may cause the motor to overheat or cause damage to parts of the pump. It may also shorten the life of your pump.

USE AND INSTALLATION

Your pump is designed and built to give you reliable performance and long life. It will pump water automatically for years when properly installed in the right environment.
REMOVING OLD PUMP. (If necessary)

1. **Make sure power supply is disconnected.**
2. **After the power is off, remove the old pump. There are many different possible types of installations.**

It is best to remove all old piping and start over with new piping. Be sure to clean all debris and dirt out of the sump basin before installing your new pump.
Be sure to have a grounded 120V AC outlet mounted within 6 ft. of your sump basin.
Again, it is highly recommended that a GFCI (ground fault circuit interrupter) outlet be installed in the receptacle box.

INSTALLATION (New Pump)

1. Set your new pump in the bottom of the sump basin off to one side. The pump should be placed on a solid foundation. Do not place the pump directly on the ground or sandy or rock surfaces. Sand and small stones may clog or cause damage to your pump.

2. Make sure the float switch will swing freely from the bottom to top without coming in contact with the side of the sump basin. Contact with the side of the sump basin may cause the switch to malfunction. See figure below.

Vertical Switch Installations

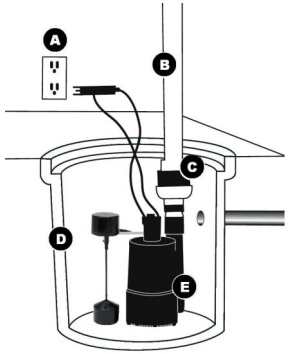

A. Grounded Outlet. A GFCI outlet is strongly recommended.
B. Discharge Pipe
C. Full-flow swing type check valve
D. Sump basin. Min. 14" diameter
E. Position pump so the float switch operates freely without touching the sides of the basin.

3. It is highly recommended to install a full flow, swing type check valve (not included) as close to the discharge outlet on the pump as possible. A new check valve will greatly increase the life of your pump. The check valve should be the same size as the pump discharge.

4. Connect the pump and check valve together using schedule 40 PVC pipe and fittings. You can also use DWV or ABS pipe, as this is not a pressure installation. Corrugated drain hose is intended for temporary use and should not be used in a permanent installation. Although there are many types of pipe that work adequately for this installation, PVC is recommended.

5. Test your installation after you have completed setting up the pump. Plug the cord from the pump into the piggyback plug of the float switch, then plug that into your grounded outlet. The pump should not run at this point. If the pump runs, the switch is stuck in the upright position or the pump is plugged directly into the outlet and not through the piggyback switch plug. Fill the sump basin with water using buckets or a hose. When the switch floats to the upright position, the pump will turn on. The switch will turn off the pump when it reaches the down position. You may adjust the switch to meet your particular needs. Remember the switch must swing freely without touching the sides of the sump basin. NOTE: The cut out (turn off) setting is the only adjustment available on vertical type switches.

⚠ DANGER

RISK OF ELECTRICAL SHOCK. Always disconnect the power source before attempting to install, service or perform maintenance on the pump. Failure to do so may result in fatal electrical shock.

TROUBLESHOOTING

PROBLEM	POSSIBLE CAUSES	HOW TO CORRECT
If the pump does not start or run	Pump is not plugged in, switch or breaker is off	Plug pump in or turn on switch/breaker
	Check for blown fuses or tripped circuit breakers or tripped GFCI outlets	Replace fuse, reset breaker, reset GFCI outlet
	Float switch is defective	Check and replace if necessary
	Motor thermal protector tripped	Allow pump to cool. Pump will reset
	Float switch is stuck or obstructed	Remove obstruction or position pump so it will not become stuck
The pump starts and stops too often	Backflow of water from discharge hose/pipe	Install or replace check valve
	Float switch is defective	Replace float switch
If the pump runs but moves little or no water	Clogged intake screen	Clean or replace screen
	Clogged discharge hose/pipe	Remove clog
	Frozen discharge hose/pipe	Allow hose/pipe to thaw
	Pump is air locked	Clean out airlock hole with a paper clip or pipe cleaner
	Low line voltage	Check wire size and increase if necessary
	Check valve is stuck in the closed position	Inspect, repair or replace if necessary
	Check valve is installed backwards	Make sure check valve is installed in the correct direction of flow
	Worn, damaged or clogged pump parts	Inspect for wear, damage or clog and clean or replace if necessary
	Discharge head exceeds pump capacity	If pumping height is over 25', the pump will not move water. See performance chart
Pump does not shut off	Float switch is obstructed or stuck	Remove obstruction
	Defective Float Switch	Replace switch